Pwr Supply for MK1 ~~Range~~ Tgt calib

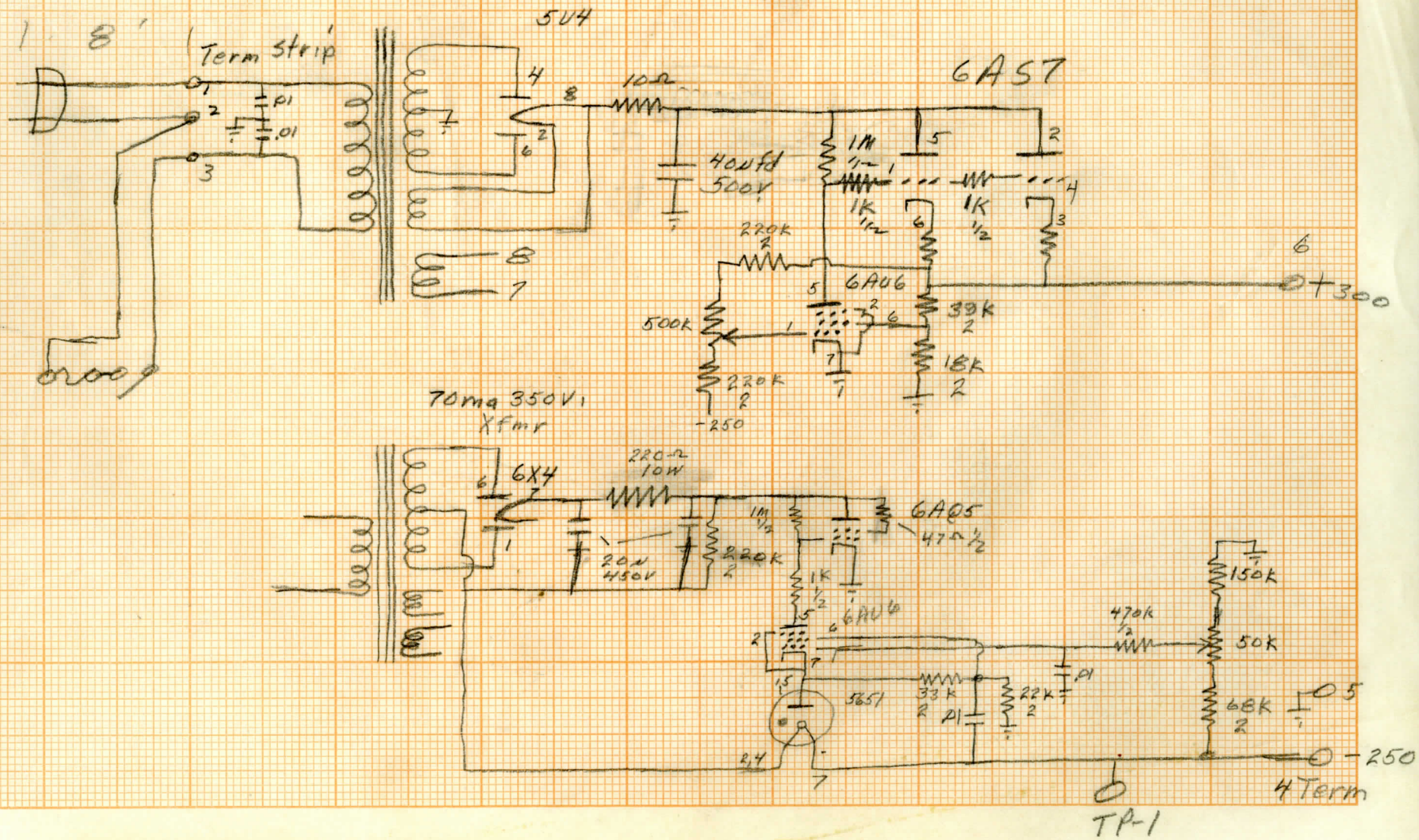

Form No. 899—20 Squares to Inch
AMERICAN PAD & PAPER CO., HOLYOKE, MASS