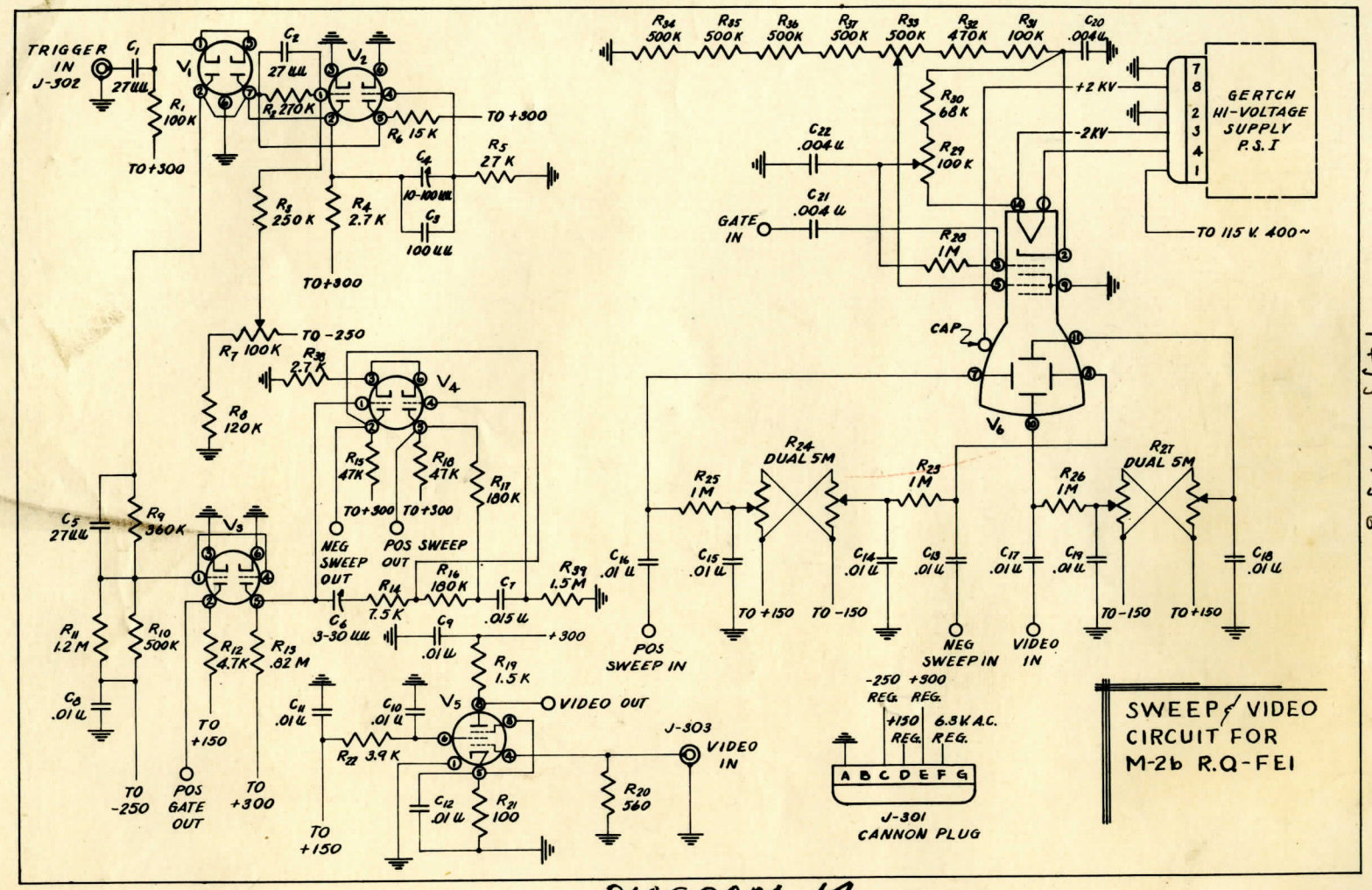
TRIGGER IN J-302
C1 27uu
R1 100K
TO +300
V1
C2 27uu
R2 270K
V2
R6 15K
TO +300
R5 27K
C4 10-100uu
C3 100uu
R3 250K
R4 2.7K
TO +300
R7 100K
TO -250
R38 2.7K
V4
R8 120K
R15 47K
R18 47K
R17 180K
TO +300
TO +300
NEG SWEEP OUT
POS SWEEP OUT
C5 27uu
R9 360K
V3
R14 7.5K
R16 180K
C7 .015u
R39 1.5M
C6 3-30uu
C9 .01u
+300
R11 1.2M
R10 500K
R12 4.7K
R13 .82M
C8 .01u
TO +150
TO -250
POS GATE OUT
TO +300
R19 1.5K
C11 .01u
C10 .01u
V5
VIDEO OUT
R22 3.9K
J-303
VIDEO IN
C12 .01u
R21 100
R20 560
TO +150
R34 500K
R35 500K
R36 500K
R37 500K
R33 500K
R32 470K
R31 100K
C20 .004u
R30 68K
R29 100K
+2KV
-2KV
GERTCH HI-VOLTAGE SUPPLY P.S.I
TO 115 V. 400~
C22 .004u
C21 .004u
GATE IN
R28 1M
CAP
V6
R24 DUAL 5M
R25 1M
R23 1M
R26 1M
R27 DUAL 5M
C16 .01u
C15 .01u
C14 .01u
C13 .01u
C17 .01u
C19 .01u
C18 .01u
TO +150
TO -150
TO -150
TO +150
POS SWEEP IN
NEG SWEEP IN
VIDEO IN
-250 REG.
+300 REG.
+150 REG.
6.3V A.C. REG.
A B C D E F G
J-301 CANNON PLUG
SWEEP & VIDEO CIRCUIT FOR M-2b R.Q-FEI

DIAGRAM 14

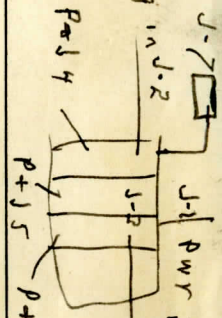
J-7
Trig in J-2
J-2 pwr in
vid
P+J 4
P+J 5
P+J 6